7/16 X 9/32 OVAL 90° TWO POSITION HANDLES

EXTERNAL THREAD

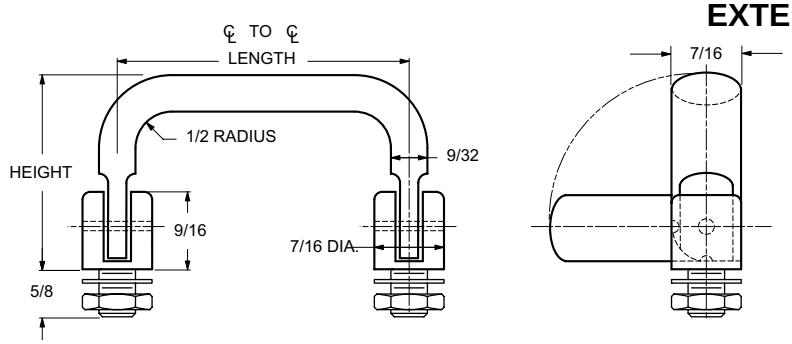

Nuts and washers are supplied

ORDERING CODE	XX	XXXX	—	XXXX	—	XX
	MATERIAL	BASIC PART		THREAD		FINISH

MATERIAL	CODE
ALUMINUM	**AL**
BRASS	**BR**
STAINLESS STEEL	**SS**

THREAD SIZE	THREAD CODE
5/16-24	**3124**
3/8-24	**3724**

LENGTH ℄ TO ℄ ±1/32	LEG HEIGHT ±1/32	BASIC PART NUMBER
3"	1.695	**1813**
4"		**1814**
4-1/4		**1815**
4-1/2		**1816**
5"		**1817**
6"		**1818**

LENGTH ℄ TO ℄ ±1/32	LEG HEIGHT ±1/32	BASIC PART NUMBER
3"	1.791	**1819**
4"		**1820**
4-1/4		**1821**
4-1/2		**1822**
5"		**1823**
6"		**1824**
3"	1.843	**1825**
4"		**1826**
4-1/4		**1827**
4-1/2		**1828**
5"		**1829**
3"	2.125	**1830**
4"		**1831**
4-1/4		**1832**
4-1/2		**1833**
5"		**1834**

CODE	FINISH	CODE	FINISH
00	Plain — None	**21**	Iridite MIL-C-5541 — Clear
01	Passivate MIL-F-14072-E300	**22**	Iridite MIL-C-5541 — Gold #14
02	Caustic Etch	**31**	Cadmium QQ-P-416, CL 2 — Clear Chromate
12	Anodize MIL-A-8625C, Type II	**32**	Cadmium QQ-P-416, CL 2 — Color Chromate
	Sulphuric Hot Water Seal — Clear	**34**	Zinc QQ-Z-325, Type II, CL 3 — Clear Chromate
13	Anodize MIL-A-8625C, Type II	**36**	Zinc QQ-Z-325, Type II, CL 3 — Yellow Chromate
	Sulphuric Dichromate Seal — Yellow Green	**51**	Black Oxide MIL-F-495 — Brass
14	Anodize MIL-A-8625C — Black	**52**	Black Oxide MIL-C-13924 — Stainless Steel
15	Semi-Frost Anodize — Clear	**61**	Nickel QQ-N-290 CL 1, Type VI KC
16	Semi-Frost Anodize — Black	**62**	Black Nickel
17	Satin Anodize — Clear	**71**	Chrome QQ-C-320 CL 1, Type 1 — Bright
18	Satin Anodize — Black	**72**	Chrome QQ-C-320 CL 1, Type 1 — Satin

LYN-TRON, INC. 6001 S. THOMAS MALLEN ROAD • SPOKANE, WASHINGTON 99224-9406 • (509) 456-4545 • (800) 423-2734
http://www.lyntron.com • e-mail: info@lyntron.com

5/8 X 9/32 OVAL 90° TWO POSITION HANDLES

EXTERNAL THREAD

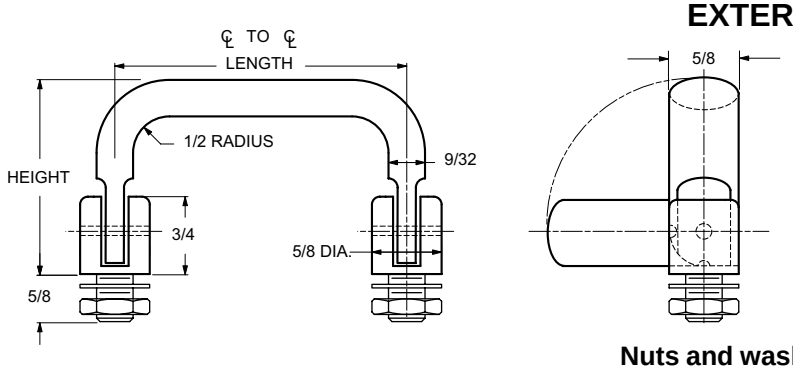

Nuts and washers are supplied

ORDERING CODE	XX	XXXX	—	XXXX	—	XX
	MATERIAL	BASIC PART		THREAD		FINISH

MATERIAL	CODE
ALUMINUM	**AL**
BRASS	**BR**
STAINLESS STEEL	**SS**

THREAD SIZE	THREAD CODE
5/16-24	**3124**
3/8-24	**3724**

LENGTH ℄ TO ℄ ±1/32	LEG HEIGHT ±1/32	BASIC PART NUMBER
3"	1.695	**1835**
4"		**1836**
4-1/4		**1837**
4-1/2		**1838**
5"		**1839**
6"		**1840**

LENGTH ℄ TO ℄ ±1/32	LEG HEIGHT ±1/32	BASIC PART NUMBER
3"	1.791	**1841**
4"		**1842**
4-1/4		**1843**
4-1/2		**1844**
5"		**1845**
6"		**1846**
3"	1.843	**1847**
4"		**1848**
4-1/4		**1849**
4-1/2		**1850**
5"		**1851**
3"	2.125	**1852**
4"		**1853**
4-1/4		**1854**
4-1/2		**1855**
5"		**1856**

CODE	FINISH	CODE	FINISH
00	Plain — None	**21**	Iridite MIL-C-5541 — Clear
01	Passivate MIL-F-14072-E300	**22**	Iridite MIL-C-5541 — Gold #14
02	Caustic Etch	**31**	Cadmium QQ-P-416, CL 2 — Clear Chromate
12	Anodize MIL-A-8625C, Type II	**32**	Cadmium QQ-P-416, CL 2 — Color Chromate
	Sulphuric Hot Water Seal — Clear	**34**	Zinc QQ-Z-325, Type II, CL 3 — Clear Chromate
13	Anodize MIL-A-8625C, Type II	**36**	Zinc QQ-Z-325, Type II, CL 3 — Yellow Chromate
	Sulphuric Dichromate Seal — Yellow Green	**51**	Black Oxide MIL-F-495 — Brass
14	Anodize MIL-A-8625C — Black	**52**	Black Oxide MIL-C-13924 — Stainless Steel
15	Semi-Frost Anodize — Clear	**61**	Nickel QQ-N-290 CL 1, Type VI KC
16	Semi-Frost Anodize — Black	**62**	Black Nickel
17	Satin Anodize — Clear	**71**	Chrome QQ-C-320 CL 1, Type 1 — Bright
18	Satin Anodize — Black	**72**	Chrome QQ-C-320 CL 1, Type 1 — Satin

LYN-TRON, INC. 6001 S. THOMAS MALLEN ROAD • SPOKANE, WASHINGTON 99224-9406 • (509) 456-4545 • (800) 423-2734
http://www.lyntron.com • e-mail: info@lyntron.com